02

ELECTROMECHANICAL MASTS

The MecMast offers a unique combination of impressive lifting strength, sturdiness, outstanding reliability and high precision. It is a screw-driven telescopic mast that has been designed to satisfy the specific demands of all kinds of applications in military, communication and surveillance fields.

THE MECMAST

The MecMast is an excellent technical solution whenever the need to carry out heavy duties is required and precise high accuracy is a critical factor. It also requires low maintenance making it an ideal solution for military applications.

The exact position and the desired height can be displayed using various interface options such as PCs or laptops and different remote controls.

KEY FEATURES

- *Supports heavy payloads up to 400kg*
- *Extended heights up to 25m*
- *Keeps the height and is operative at any intermediate position*
- *Great variety of "off-the-shelf" and customised solutions*
- *Wide range of mounting options for installations on vehicles, shelters or on open grounds*
- *It can be kept extended while vehicle is moving*
- *Performance proven rugged design guarantees for high resistance to demanding and harsh environment conditions including sand, dust, ice or snow*
- *Compliant with MIL-STD-810G , MIL-STD-461F, MIL-STD-1275E, MIL-STD-1686C and MIL-STD-464C*
- *Durable and reliable with minimum maintenance requirements*
- *Different communication and control protocols are available, e.g. RS422, RS485, Ethernet, Can bus*

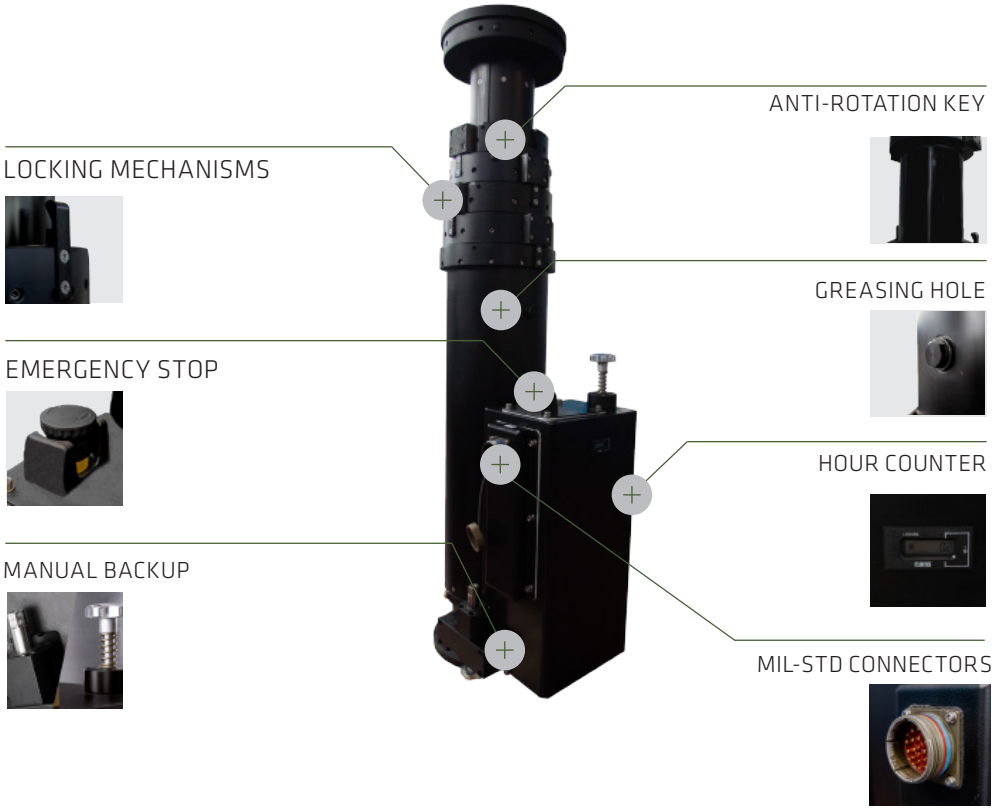

Controlling the MecMast

The MecMast is controlled by a software loaded on a USB drive supplied together with the mast. By installing it, the operator will be able to control the MecMast from a PC or a laptop.
The control screen will display the exact extended height, the turning degrees (for MecMast with electrically turnable base), the actual current consumption, the working cycles and possible warning messages.

The software is available in different languages. In addition, a simple remote control for up/down movements and a complete remote control with LCD display for all functions are also available.

A

B

C

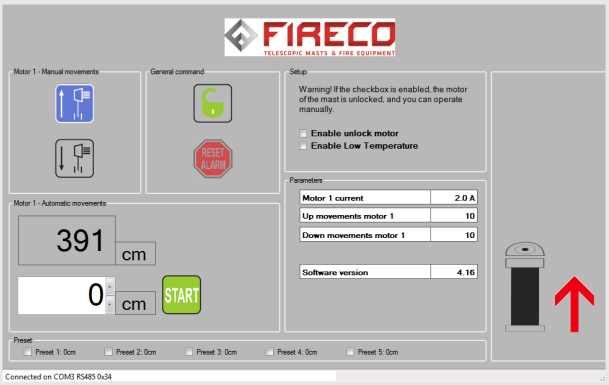

A REMOTE CONTROL WITH LCD DISPLAY

B SIMPLE REMOTE CONTROL

C SOFTWARE PROGRAM FOR LAPTOP/PC USE WITH FULL CONTROL OF THE SYSTEM

MecMast tilting solutions

For the MecMast series Fireco has developed special mounting solutions which allow to move the mast assembly from the horizontal to the vertical position and vice versa. This option renders the mast in the retracted state more compact and reduces the space that is necessary for its installation.

In addition, the possibility to tilt the mast down to the horizontal position facilitates the operators' access to the mast top and thus makes it easy to mount, dismount or modify

The **MecMast ROOF** is a compact palletised configuration suitable for installations on vehicle platforms such as military trailers or trucks. Fireco manufactures a light and a heavy version of this product, both designed to perfectly suit customers' needs.

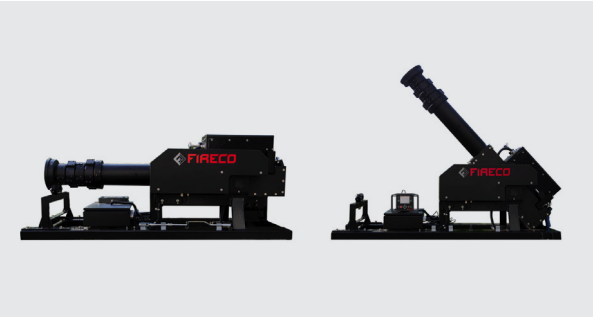

LIGHT VERSION > PAYLOAD UP TO 100 KG

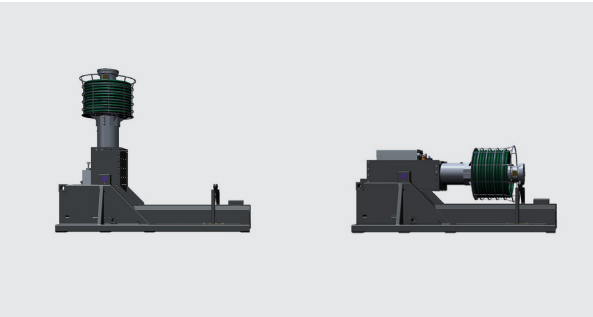

HEAVY VERSION > PAYLOAD UP TO 250 KG

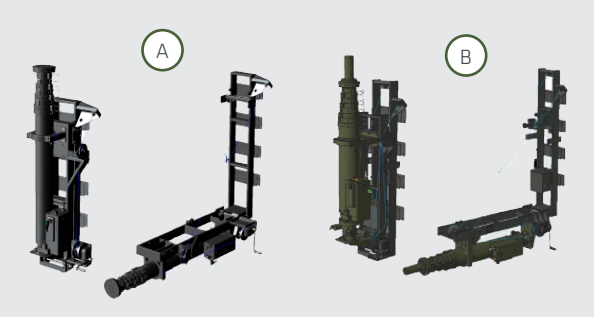

The **90° TILT mechanism** is a unique device that is suitable for mounting the MecMast on the outside of a vehicle or on other structures. This mechanism allows the tilting of the mast from vertical to a position which is more accessible for the users. This permits to easily mount important payloads on the mast top without exposing the personnel to risky heights.

A MANUALLY OPERATED WINCH B ELECTRICALLY OPERATED WINCH

Electrically and manually turnable base

The MecMast is the only electromechanical mast on the market, that is available with a manually or an electrically turnable base. With the electrically turnable base the position can be preset and the degree of rotation can be displayed on the remote control (with LCD) or on your laptop, with a precision of 1°. Also in case of temporary power loss the system will always show to the operator the correct rotating angle of the mast, even if it has been manually moved during the black-out.

MANUALLY TURNABLE BASE

ELECTRICALLY TURNABLE BASE

Military standards

MIL-STD-461F

CE102 - Conducted emission: Power leads, 10 kHz to 10 MHz
CS101 - Conducted susceptibility: Power leads, 30 Hz to 150 kHz
CS114 - Conducted susceptibility: Bulk cable injection, 10 kHz to 200 MHz
CS115 - Conducted susceptibility: Bulk cable injection, impulse excitation
CS116 - Conducted susceptibility: Damped sinusoidal transients, cables and power leads, 10 kHz to 100 MHz
RS101 - Radiated susceptibility: Magnetic field, 30 Hz to 100 kHz
RS103 - Radiated susceptibility: Electric field, 2 MHz to 18 GHz

MIL-STD-810G

500.5 - Altitude: Sea level up to 15.000 ft (57,18 kPa)
500.5 - Transportation Altitude: Sea level up to 15.000 ft (unpressurized)
501.5 & 502.5 - Operating Temperature Ranges: -44° C to +55° C
501.5 & 502.5 - Storage Temperature Ranges: -44° C to +70° C
506.5 - Rain
508.6 - Fungus
509.5 - Salt Fog
510.5 - Sand and Dust
516.6 - Transit Drop and Crash Hazard
521.3 - Ice and Freezing Rain

MIL-STD-810F

505.4 - Solar Radiation
507.4 - Humidity
514.5 - Vibration
516.5 - Shock

MIL-STD-1275E

Steady State and Transient Voltage

MIL-STD-1686C

Electrostatic discharge

MIL-STD-464C

5.11.3 - Mechanical Interference

Available models

MAIN TUBE Ø127mm - 4 SECTIONS - END TUBE Ø90mm

MODEL	DIMENSIONS mm		PAYLOAD	WEIGHT
	EXTENDED	RETRACTED		
MM.0404.SE	4021	1430	90 kg	70 kg
MM.0405.SE	5011	1700	90 kg	74 kg
MM.0406.SE	6011	1980	80 kg	81 kg
MM.0407.SE	7011	2260	80 kg	86 kg
MM.0408.SE	8011	2540	70 kg	91 kg
MM.0409.SE	9011	2820	70 kg	95 kg

MAIN TUBE Ø152mm - 4 SECTIONS - END TUBE Ø115mm

MODEL	DIMENSIONS mm		PAYLOAD	WEIGHT
	EXTENDED	RETRACTED		
MM.2404.SE	4021	1430	150 kg	79 kg
MM.2405.SE	5011	1700	150 kg	87 kg
MM.2406.SE	6011	1980	140kg	93 kg
MM.2407.SE	7011	2260	140 kg	99 kg
MM.2408.SE	8011	2540	130 kg	105 kg
MM.2409.SE	9011	2820	130 kg	111 kg

MAIN TUBE Ø152mm - 5 SECTIONS - END TUBE Ø102mm

MODEL	DIMENSIONS mm		PAYLOAD	WEIGHT
	EXTENDED	RETRACTED		
MM.2504.SE	4035	1270	130 kg	80 kg
MM.2505.SE	5025	1500	130 kg	86 kg
MM.2506.SE	6045	1720	120 kg	91 kg
MM.2507.SE	7035	1950	120 kg	98 kg
MM.2508.SE	8025	2180	110 kg	104 kg
MM.2509.SE	9045	2400	110 kg	109 kg
MM.2510.SE	10035	2630	100 kg	115 kg

MAIN TUBE Ø152mm - 6 SECTIONS - END TUBE Ø90mm

MODEL	DIMENSIONS mm		PAYLOAD	WEIGHT
	EXTENDED	RETRACTED		
MM.2604.SE	4029	1200	110 kg	82 kg
MM.2605.SE	5009	1380	110 kg	87 kg
MM.2606.SE	6049	1570	100 kg	92 kg
MM.2607.SE	7049	1770	100 kg	98 kg
MM.2608.SE	8029	1950	90 kg	104 kg
MM.2609.SE	9009	2130	90 kg	109 kg
MM.2610.SE	10009	2330	80 kg	114 kg
MM.2611.SE	11049	2520	80 kg	119 kg
MM.2612.SE	12029	2700	70 kg	124 kg

DIMENSIONS OF MECMAST WITH MANUALLY TURNABLE BASE

For MecMast Ø200 - 250mm please add 204mm to mast dimensions.
For MecMast Ø127 - 152mm please add 175mm to mast dimensions.

DIMENSIONS OF MECMAST WITH ELECTRICALLY TURNBALE BASE

For Mast Ø200 - 250mm please add 242mm to mast dimensions.
For MecMast Ø127 - 152mm please add 203mm to mast dimensions.

Available models

MAIN TUBE Ø200mm - 5 SECTIONS - END TUBE Ø140mm

MODEL	DIMENSIONS mm		PAYLOAD	WEIGHT
	EXTENDED	RETRACTED		
MM.3504.SE	4034	1270	210 kg	99 kg
MM.3505.SE	5024	1500	210 kg	108 kg
MM.3506.SE	6014	1730	200 kg	116 kg
MM.3507.SE	7004	1960	200 kg	127 kg
MM.3508.SE	8044	2200	190 kg	136 kg
MM.3509.SE	9014	2410	190 kg	144 kg
MM.3510.SE	10004	2640	180 kg	153 kg

MAIN TUBE Ø200mm - 6 SECTIONS - END TUBE Ø127mm

MODEL	DIMENSIONS mm		PAYLOAD	WEIGHT
	EXTENDED	RETRACTED		
MM.3604.SE	4006	1180	190 kg	101 kg
MM.3605.SE	5006	1380	190 kg	109 kg
MM.3606.SE	6046	1570	180 kg	116 kg
MM.3607.SE	7046	1770	180 kg	127 kg
MM.3608.SE	8026	1950	170 kg	134 kg
MM.3609.SE	9026	2150	170 kg	142 kg
MM.3610.SE	10006	2330	160 kg	150 kg
MM.3611.SE	11006	2530	160 kg	158 kg
MM.3612.SE	12046	2720	160 kg	165 kg

MAIN TUBE Ø200mm - 7 SECTIONS - END TUBE Ø115mm

MODEL	DIMENSIONS mm		PAYLOAD	WEIGHT
	EXTENDED	RETRACTED		
MM.3704.SE	4028	1130	170 kg	102 kg
MM.3705.SE	5028	1290	170 kg	109 kg
MM.3706.SE	6048	1470	160 kg	117 kg
MM.3707.SE	7048	1630	160 kg	124 kg
MM.3708.SE	8048	1790	150 kg	133 kg
MM.3709.SE	9048	1950	150 kg	140 kg
MM.3710.SE	10068	2130	140 kg	148 kg
MM.3711.SE	11068	2290	140 kg	155 kg
MM.3712.SE	12018	2460	130 kg	163 kg
MM.3713.SE	13018	2620	130 kg	170 kg

MAIN TUBE Ø200mm - 8 SECTIONS - END TUBE Ø102mm

MODEL	DIMENSIONS mm		PAYLOAD	WEIGHT
	EXTENDED	RETRACTED		
MM.3805.SE	5000	1250	140 kg	110 kg
MM.3806.SE	6060	1400	140 kg	117 kg
MM.3807.SE	7040	1540	130 kg	124 kg
MM.3808.SE	8020	1680	130 kg	131 kg
MM.3809.SE	9000	1820	120 kg	138 kg
MM.3810.SE	10060	1970	120 kg	145 kg
MM.3811.SE	11040	2110	110 kg	152 kg
MM.3812.SE	12040	2270	110 kg	152 kg
MM.3813.SE	13020	2410	100 kg	166 kg
MM.3814.SE	14000	2550	100 kg	173 kg

Available models

MAIN TUBE Ø200mm - 9 SECTIONS - END TUBE Ø90mm

MODEL	DIMENSIONS mm		PAYLOAD	WEIGHT
	EXTENDED	RETRACTED		
MM.3905.SE	5012	1240	120 kg	112 kg
MM.3906.SE	6022	1370	120 kg	118 kg
MM.3907.SE	7012	1480	120 kg	123 kg
MM.3908.SE	8022	1610	110 kg	129 kg
MM.3909.SE	9072	1740	110 kg	137 kg
MM.3910.SE	10042	1870	100 kg	144 kg
MM.3911.SE	11052	2000	100 kg	150 kg
MM.3912.SE	12062	2130	90 kg	156 kg
MM.3913.SE	13072	2260	90 kg	163 kg
MM.3914.SE	14082	2390	80 kg	169 kg
MM.3915.SE	15002	2510	80 kg	175 kg
MM.3916.SE	16012	2640	80 kg	182 kg

MAIN TUBE Ø250mm - 6 SECTIONS - END TUBE Ø152mm

MODEL	DIMENSIONS mm		PAYLOAD	WEIGHT
	EXTENDED	RETRACTED		
MM.4604.SE	4026	1200	240 kg	127 kg
MM.4605.SE	5026	1400	240 kg	138 kg
MM.4606.SE	6026	1600	220 kg	149 kg
MM.4607.SE	7026	1800	220 kg	164 kg
MM.4608.SE	8018	1980	200 kg	175 kg
MM.4609.SE	9006	2180	200 kg	187 kg
MM.4610.SE	10046	2370	180 kg	198 kg
MM.4611.SE	11046	2570	180 kg	209 kg
MM.4612.SE	12046	2770	180 kg	222 kg

MAIN TUBE Ø250mm - 7 SECTIONS - END TUBE Ø140mm

MODEL	DIMENSIONS mm		PAYLOAD	WEIGHT
	EXTENDED	RETRACTED		
MM.4704.SE	4048	1150	220 kg	128 kg
MM.4705.SE	5048	1310	220 kg	137 kg
MM.4706.SE	6068	1490	210 kg	149 kg
MM.4707.SE	7018	1660	210 kg	159 kg
MM.4708.SE	8018	1820	200 kg	172 kg
MM.4709.SE	9018	1980	200 kg	182 kg
MM.4710.SE	10038	2160	190 kg	194 kg
MM.4711.SE	11038	2320	190 kg	204 kg
MM.4712.SE	12058	2500	170 kg	215 kg
MM.4713.SE	13058	2660	170 kg	225 kg

MAIN TUBE Ø250mm - 8 SECTIONS - END TUBE Ø127mm

MODEL	DIMENSIONS mm		PAYLOAD	WEIGHT
	EXTENDED	RETRACTED		
MM.4805.SE	5020	1270	200 kg	139 kg
MM.4806.SE	6000	1410	200 kg	148 kg
MM.4807.SE	7060	1560	190 kg	157 kg
MM.4808.SE	8060	1720	190 kg	170 kg
MM.4809.SE	9040	1860	180 kg	180 kg
MM.4810.SE	10020	2000	180 kg	189 kg
MM.4811.SE	11000	2140	170 kg	199 kg
MM.4812.SE	12000	2300	170 kg	209 kg
MM.4813.SE	13060	2450	160 kg	219 kg
MM.4814.SE	14040	2590	160 kg	229 kg
MM.4815.SE	15034	2750	150 kg	240 kg

Available models

MAIN TUBE Ø250mm - 9 SECTIONS - END TUBE Ø115mm

MODEL	DIMENSIONS mm		PAYLOAD	WEIGHT
	EXTENDED	RETRACTED		
MM.4905.SE	5012	1240	180 kg	138 kg
MM.4906.SE	6022	1370	180 kg	147 kg
MM.4907.SE	7032	1500	180 kg	156 kg
MM.4908.SE	8042	1630	170 kg	165 kg
MM.4909.SE	9072	1780	170 kg	178 kg
MM.4910.SE	10082	1910	160 kg	187 kg
MM.4911.SE	11002	2030	160 kg	195 kg
MM.4912.SE	12012	2160	150 kg	204 kg
MM.4913.SE	13022	2290	150 kg	214 kg
MM.4914.SE	14032	2420	140 kg	223 kg
MM.4915.SE	15062	2570	140 kg	234 kg
MM.4916.SE	16072	2700	130 kg	243 kg

MAIN TUBE Ø250mm - 10 SECTIONS - END TUBE Ø102mm

MODEL	DIMENSIONS mm		PAYLOAD	WEIGHT
	EXTENDED	RETRACTED		
MM.5006.SE	6014	1340	160 kg	146 kg
MM.5007.SE	7034	1460	160 kg	155 kg
MM.5008.SE	8054	1580	150 kg	163 kg
MM.5009.SE	9074	1700	150 kg	174 kg
MM.5010.SE	10014	1830	140 kg	184 kg
MM.5011.SE	11034	1950	140 kg	193 kg
MM.5012.SE	12054	2070	130 kg	201 kg
MM.5013.SE	13074	2190	130 kg	210 kg
MM.5014.SE	14044	2305	120 kg	219 kg
MM.5015.SE	15014	2420	120 kg	227 kg
MM.5016.SE	16034	2540	110 kg	236 kg
MM.5017.SE	17054	2660	110 kg	245 kg

MAIN TUBE Ø250mm - 11 SECTIONS - END TUBE Ø90mm

MODEL	DIMENSIONS mm		PAYLOAD	WEIGHT
	EXTENDED	RETRACTED		
MM.5106.SE	6046	1340	140 kg	146 kg
MM.5107.SE	7031	1455	140 kg	155 kg
MM.5108.SE	8041	1565	130 kg	164 kg
MM.5109.SE	9051	1675	130 kg	172 kg
MM.5110.SE	10006	1780	120 kg	181 kg
MM.5111.SE	11016	1890	120 kg	189 kg
MM.5112.SE	12026	2000	110 kg	198 kg
MM.5113.SE	13036	2110	110 kg	206 kg
MM.5114.SE	14046	2220	100 kg	215 kg
MM.5115.SE	15056	2330	100 kg	223 kg
MM.5116.SE	16066	2440	90 kg	232 kg
MM.5117.SE	17021	2535	90 kg	240 kg
MM.5118.SE	18031	2655	80 kg	248 kg
MM.5120.SE	20051	2875	80 kg	265 kg

For special dimensions please do not hesitate to contact us.

It is possible to increase the payload by reducing the extension speed slightly.

MecMast accessories

THE LEVELLING SYSTEM is a manually operated device specially designed for vehicle mounted masts. Its purpose is to adjust the mast inclination when the vehicle is on a slope, in order to grant to the equipment mounted on the mast top a horizontal working condition.

It is composed by a lower regulating support bracket, equipped with two manual adjusting handles and an upper holding bracket equipped with an oscillating ring.

Besides the different remote controls, the MecMast can be equipped with various accessories. For example: guying set (including guying collars, ropes, pickets and carrying bag), Nycoil cable conduits, Nycoil baskets, protection bellows against dust and sand in different colours, ice spacers for using the mast at low temperatures, anti-freeze liquid for preventing the creation of ice layers on the tubes and for melting it, etc.

ELECTRONIC BOX WITH CONNECTORS

The Mecmast box is available in different versions with a wide range of military connectors.

NYCOIL

The Nycoil is made from flexible nylon and is resistant to many chemicals and petroleum based products making its use on vehicles safe and reliable.

NYCOIL BASKET

Basket for the storing of an external Nycoil cable conduit.

ICE SPACERS

Against compressed ice and snow between the collars.

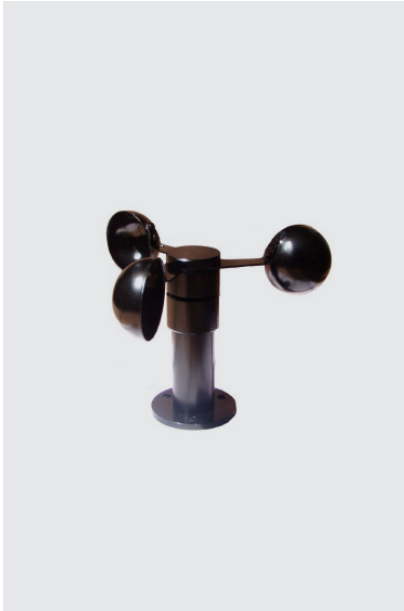

ANEMOMETER

The anemometer is extremely accurate, has a low starting torque, a particularly robust design and is very durable.

PROTECTION BELLOW

Protection against dust and sand, available in different colours.